mm [inch]

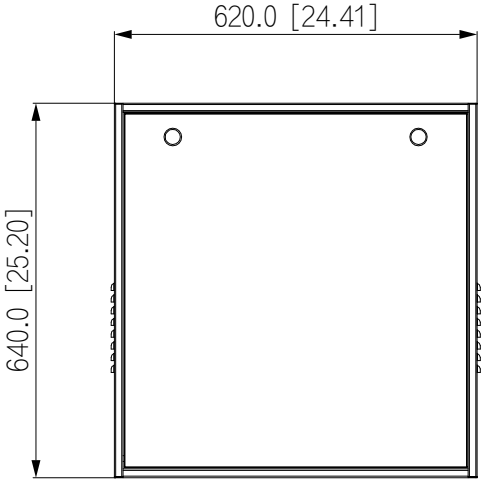
620.0 [24.41]
640.0 [25.20]

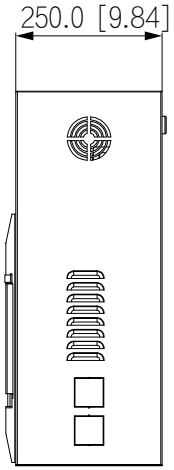
250.0 [9.84]

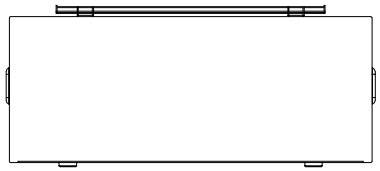

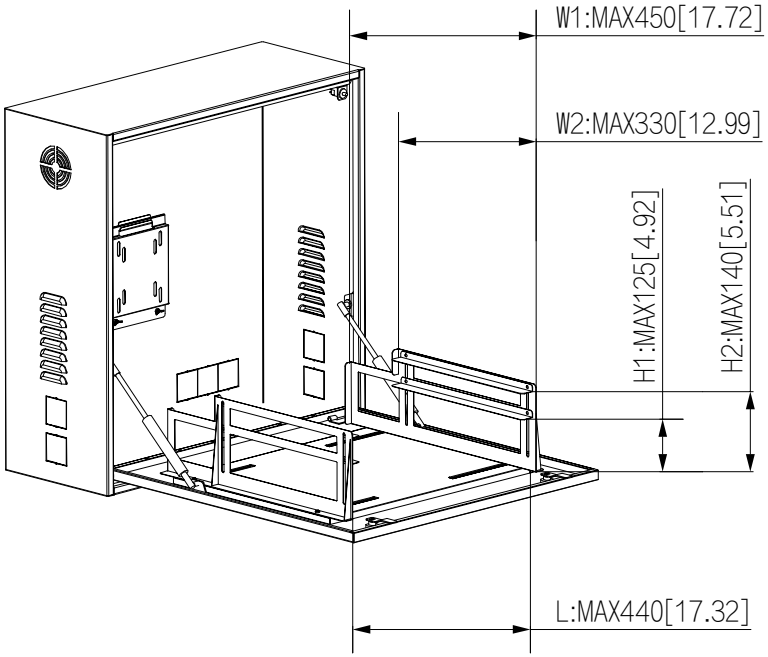
W1:MAX450[17.72]
W2:MAX330[12.99]
H1:MAX125[4.92]
H2:MAX140[5.51]
L:MAX440[17.32]